500 South Park Avenue
South Beloit, IL 61080
800.236.1072
msprecast.com

16" X 48" HOLLOW CORE

(4 HOUR FIRE RATING)

SAFE LOAD TABLE

Standard Designation	#/Size of 7-Wire strand	Strand Area Sq.In.	Mu in Ft.-Kips per unit	SIMPLE SPAN IN FEET-CENTER TO CENTER OF END BEARINGS																														
				30	31	32	33	34	35	36	37	38	39	40	41	42	43	44	45	46	47	48	49	50	51	52	53	54	55	56	57	58	59	60
1.75-28910	2-1/2,9-.6	2.259	575.7	334	306	281	258	237	218	201	185	170	156	144	132	121	111	101	92	84	76	69	62	56	50	44	39							
1.75-28610	2-1/2,6-.6	1.608	422.5	158	151	144	137	131	125	120	114	109	105	95	85	77	69	61	54	47	41													

UNIFORMLY DISTRIBUTED SUPERIMPOSED LOAD IN LBS. PER SQ. FT.

(Includes the live load plus dead load that is in addition to the weight of the grouted slabs in place.)

FOR LOADS & SPANS NOT SHOWN CONTACT MID-STATES CONCRETE INDUSTRIES

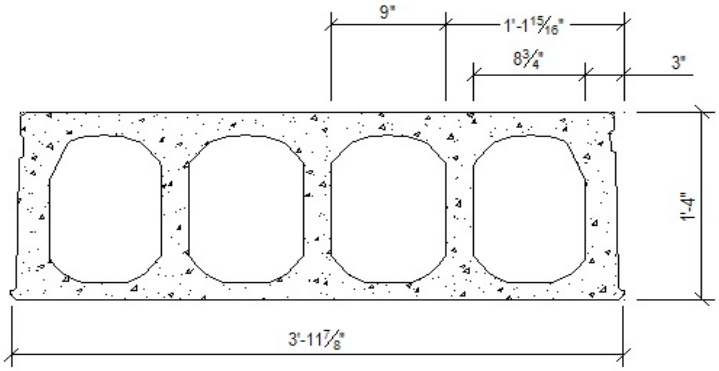

HOLLOW CORE: F'c = 9000PSI, WEIGHT = 100 PSF

1- Dead Load, 100 psf grouted weight of structural unit.
2- Tabulated loads are based on ACI318-14 where M_u=1.2 M_d+1.6M_L and with all loads superimposed on the structural section considered as live load.
3- Camber is a result of the design rather than a design requirement. Heavy superimposed loads & / or long spans may cause excessive camber.
Contact Mid-States Concrete Industries for more specific camber information.
4- Loads shaded in blue are governed by ACI shear section 7.6.3.1. Lower strand pattern shown above reflects shear allowable without added solid at the ends. Higher strand pattern shows capacities that can be developed after two solid voids added at each end for 3 ft. length, at time of casting.
5- All strand stressed to 65% of ultimate.

PCI Certified Plant